"The best high voltage design solution"

F1 SERIES 1 WATT PROGRAMABLE REGULATED HV DC/DC CONVERTERS

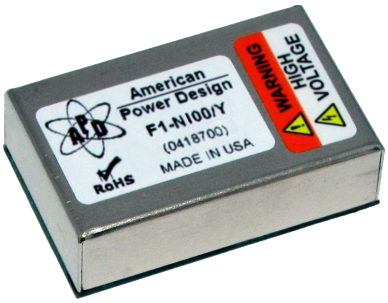

FEATURES

- Customer Selects Output Voltage
- Fully Regulated Outputs to + or - 2000 Vdc
- 0-100% Programable Output
- High Stability (<25ppm/°C)
- Onboard Precision Reference
- Output Voltage Monitor
- Low Output Noise & EMI/RFI
- External Calibration Adjustment
- Continuous Short Circuit Protection

The F1 Series miniature regulated high voltage DC/DC converter offers a 100% programable high voltage output. Output voltage monitor and onboard precision reference are standard. All models will tolerate a short circuit indefinitely.

ELECTRICAL SPECIFICATIONS

Input Voltage Range ..... 4.75V to 5.25Vdc / 11.5V to 15.5Vdc
Output Voltage Accuracy ..... < 1%
Line Regulation ..... <0.01%
Load Regulation ..... <0.05%
Output Ripple ..... <0.001% P-P
Onboard Precision Reference .....2.048Vdc / 5Vdc @ 1mA
Programming Voltage ..... 0 to 2.048Vdc / 0 to 5Vdc @ <100uA

Input Filter ..... Low ESR Capacitor
Reverse Input Protection 50Vdc
Short Circuit Protection ..... Continuous
Switching Frequency ..... 180 - 250 kHz
Calibration Adjustment ..... >1%
Programming Voltage Shutdown ..... >104%
Output Voltage Monitor ..... 0 to 2.048V / 0 to 5V = 0 to 100%
Programming Linearity (5% to 100% Vout) ..... <0.5%

GENERAL SPECIFICATIONS

Stability ..... < 50ppm / Hr.
Temp. Stability ..... < 25ppm/°C
Temp. (Operating , Case) ..... -55 to +70°C
Temp. (Storage) ..... -55 to +95°C
Humidity ..... 0 to 95% (Non-Condensing)

Thermal Shock Limit ..... 1°C / 10 Seconds
EMI/RFI ..... Six Sided Shield
Derating ..... None
Cooling ..... Free-Air Convection

PHYSICAL SPECIFICATIONS

Dimensions & Weight ..... 1.1 x 1.75 x 0.5 inches @ 1.3 Oz

Case Material ..... Nickle Plated Metal
(With Non-Conductive Base Plate)

***NOTE:** Specifications are at the maximum rated output after a 30 minute warm-up period unless otherwise specified.*

European Master Stocking Distributor
Phone: +41 44 730 33 53
Email: sales@hvps-condatas.com · www.hvps-condatas.com
Rietbachstrasse 7 · 8952 Schlieren (ZH) · Switzerland

F1 SERIES 1 WATT PROGRAMABLE REGULATED HV DC/DC CONVERTERS

5VDC INPUT MODELS

REPRESENTATIVE MODEL LISTING								
MODEL NUMBER		INPUT CURRENT		OUTPUT SPECIFICATIONS				
Non-RoHs	RoHs	NO LOAD	FULL LOAD	VOLTAGE	RIPPLE	CURRENT	REGULATION	
							LOAD	LINE
F15-P10	F15-P10/Y	<65 mA	<420 mA	0 to +100Vdc	<0.05% (50mV p-p)	0 - 10mA	<0.05%	<0.01%
F15-N10	F15-N10/Y	<65 mA	<420 mA	0 to -100Vdc	<0.05% (50mV p-p)	0 - 10mA	<0.05%	<0.01%
F15-P20	F15-P20/Y	<65 mA	<420 mA	0 to +200Vdc	<0.01% (10mV p-p)	0 - 5mA	<0.01%	<0.01%
F15-N20	F15-N20/Y	<65 mA	<420 mA	0 to -200Vdc	<0.01% (10mV p-p)	0 - 5mA	<0.005%	<0.003%
F15-P30	F15-P30/Y	<65 mA	<420 mA	0 to +300Vdc	<0.01% (30mV p-p)	0 - 3.3mA	<0.005%	<0.003%
F15-N30	F15-N30/Y	<65 mA	<420 mA	0 to -300Vdc	<0.01% (30mV p-p)	0 - 3.3mA	<0.005%	<0.003%
F15-P50	F15-P50/Y	<65 mA	<420 mA	0 to +500Vdc	<0.005% (25mV p-p)	0 - 2mA	<0.003%	<0.002%
F15-N50	F15-N50/Y	<65 mA	<420 mA	0 to -500Vdc	<0.005% (50mV p-p)	0 - 2mA	<0.005%	<0.002%
F15-P60	F15-P60/Y	<65 mA	<420 mA	0 to +600Vdc	<0.005% (30mV p-p)	0 - 1.67mA	<0.005%	<0.002%
F15-N60	F15-N60/Y	<65 mA	<420 mA	0 to -600Vdc	<0.005% (30mV p-p)	0 - 1.67mA	<0.005%	<0.002%
F15-P100	F15-P100/Y	<65 mA	<420 mA	0 to +1000Vdc	<0.001% (10mV p-p)	0 - 1mA	<0.005%	<0.001%
F15-N100	F15-N100/Y	<65 mA	<420 mA	0 to -1000Vdc	<0.001% (10mV p-p)	0 - 1mA	<0.005%	<0.001%
F15-P125	F15-P125/Y	<65 mA	<420 mA	0 to +1250Vdc	<0.001% (12mV p-p)	0 - 0.8mA	<0.005%	<0.001%
F15-N125	F15-N125/Y	<65 mA	<420 mA	0 to -1250Vdc	<0.001% (12mV p-p)	0 - 0.8mA	<0.005%	<0.001%
F15-P150	F15-P150/Y	<155 mA	<550 mA	0 to +1500Vdc	<0.001% (15mV p-p)	0 - 0.67mA	<0.005%	<0.001%
F15-N150	F15-N150/Y	<155 mA	<550 mA	0 to -1500Vdc	<0.001% (15mV p-p)	0 - 0.67mA	<0.005%	<0.001%
F15-P200	F15-P200/Y	<155 mA	<550 mA	0 to +2000Vdc	<0.001% (20mV p-p)	0 - 0.5mA	<0.005%	<0.03%
F15-N200	F15-N200/Y	<155 mA	<550 mA	0 to -2000Vdc	<0.001% (20mV p-p)	0 - 0.5 mA	<0.001%	<0.001%

European Master Stocking Distributor
Phone: +41 44 730 33 53
Email: sales@hvps-condatas.com · www.hvps-condatas.com
Rietbachstrasse 7 · 8952 Schlieren (ZH) · Switzerland

"The best high voltage design solution"

F1 SERIES 1 WATT PROGRAMABLE REGULATED HV DC/DC CONVERTERS

12VDC INPUT MODELS

REPRESENTATIVE MODEL LISTING								
MODEL NUMBER		INPUT CURRENT		OUTPUT SPECIFICATIONS				
Non-RoHs	RoHs	NO LOAD	FULL LOAD	VOLTAGE	RIPPLE	CURRENT	REGULATION	
							LOAD	LINE
F112-P10	F112-P10/Y	<80 mA	<220 mA	0 to +100Vdc	<0.05% (50mV p-p)	0 - 10mA	<0.05%	<0.01%
F112-N10	F112-N10/Y	<80 mA	<220 mA	0 to -100Vdc	<0.05% (50mV p-p)	0 - 10mA	<0.05%	<0.01%
F112-P20	F112-P20/Y	<80 mA	<220 mA	0 to +200Vdc	<0.01% (10mV p-p)	0 - 5mA	<0.05%	<0.01%
F112-N20	F112-N20/Y	<80 mA	<220 mA	0 to -200Vdc	<0.01% (10mV p-p)	0 - 5mA	<0.05%	<0.01%
F112-P30	F112-P30/Y	<80 mA	<220 mA	0 to +300Vdc	<0.01% (30mV p-p)	0 - 3.3mA	<0.05%	<0.01%
F112-N30	F112-N30/Y	<80 mA	<220 mA	0 to -300Vdc	<0.01% (30mV p-p)	0 - 3.3mA	<0.05%	<0.01%
F112-P50	F112-P50/Y	<80 mA	<220 mA	0 to +500Vdc	<0.01% (50mV p-p)	0 - 2mA	<0.01%	<0.01%
F112-N50	F112-N50/Y	<80 mA	<220 mA	0 to -500Vdc	<0.01% (50mV p-p)	0 - 2mA	<0.01%	<0.01%
F112-P60	F112-P60/Y	<80 mA	<220 mA	0 to +600Vdc	<0.01% (60mV p-p)	0 - 1.67mA	<0.01%	<0.01%
F112-N60	F112-N60/Y	<80 mA	<220 mA	0 to -600Vdc	<0.01% (60mV p-p)	0 - 1.67mA	<0.01%	<0.01%
F112-P100	F112-P100/Y	<80 mA	<220 mA	0 to +1000Vdc	<0.001% (10mV p-p)	0 - 1mA	<0.005%	<0.001%
F112-N100	F112-N100/Y	<80 mA	<220 mA	0 to -1000Vdc	<0.001% (10mV p-p)	0 - 1mA	<0.005%	<0.001%
F112-P125	F112-P125/Y	<80 mA	<220 mA	0 to +1250Vdc	<0.0005% (6mV p-p)	0 - 0.8mA	<0.005%	<0.001%
F112-N125	F112-N125/Y	<80 mA	<220 mA	0 to -1250Vdc	<0.0005% (6mV p-p)	0 - 0.8mA	<0.005%	<0.001%
F112-P150	F112-P150/Y	<100 mA	<220 mA	0 to +1500Vdc	<0.001% (15mV p-p)	0 - 0.67mA	<0.01%	<0.01%
F112-N150	F112-N150/Y	<100 mA	<220 mA	0 to -1500Vdc	<0.001% (15mV p-p)	0 - 0.67mA	<0.01%	<0.01%
F112-P200	F112-P200/Y	<100 mA	<220 mA	0 to +2000Vdc	<0.001% (20mV p-p)	0 - 0.5mA	<0.01%	<0.01%
F112-N200	F112-N200/Y	<100 mA	<220 mA	0 to -2000Vdc	<0.001% (20mV p-p)	0 - 0.5 mA	<0.01%	<0.01%

F15-P100/Y

- Product Family
- Total Output Power
- Input Voltage
- Positive/Negative Output
- /Y RoHS Compliance

Customer Selects Output Voltage *

The F1 Series are designed such that the customer may order any output voltage (positive or negative) from 100Vdc to 2000Vdc at no additional charge.

****ACTUAL OUTPUT VOLTAGE IS 10X***

European Master Stocking Distributor
Phone: +41 44 730 33 53
Email: sales@hvps-condatas.com · www.hvps-condatas.com
Rietbachstrasse 7 · 8952 Schlieren (ZH) · Switzerland

F1 SERIES 1 WATT PROGRAMABLE REGULATED HV DC/DC CONVERTERS

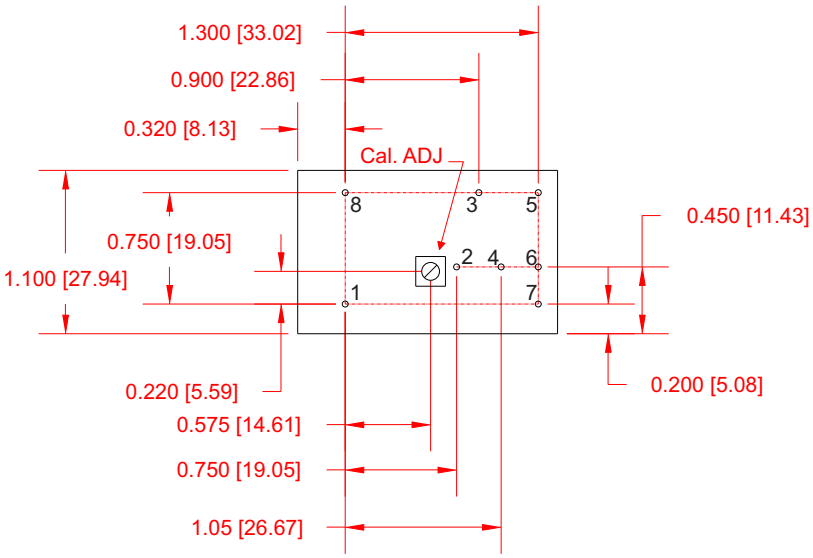

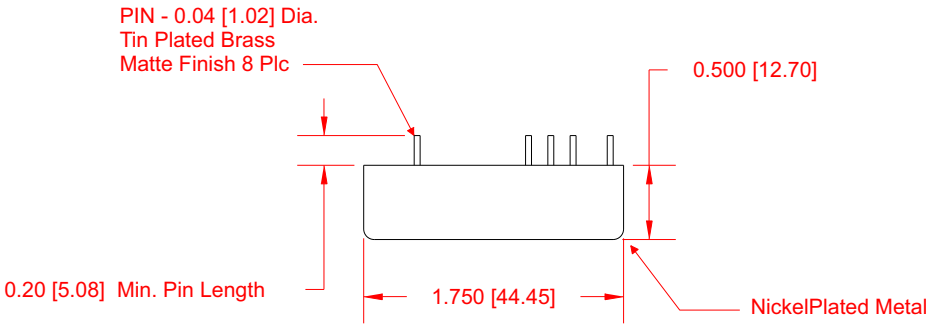

PIN #	FUNCTION
1	HV Output
2	Control/ Programming Voltage
3	Gnd
4	Reference Voltage
5	Case Gnd
6	+ Input
7	Output Voltage Monitor
8	HV Return

Dimensions are in Inches
[Metric equivalents in brackets]

European Master Stocking Distributor
Phone: +41 44 730 33 53
Email: sales@hvps-condatas.com · www.hvps-condatas.com
Rietbachstrasse 7 · 8952 Schlieren (ZH) · Switzerland

APPLICATION NOTES

INRUSH CURRENT

The inrush current of the F1 Series has been kept as low as possible. However, a series resistor may be inserted in the input line to limit this current further.

REVERSE INPUT PROTECTION

The F1 Series is equipped diode placed in series with the + Input (Pin 6) of the converter, this allows current to flow only if the correct polarity is applied.

SHORT CIRCUIT PROTECTION

The F1 Series is equipped with short circuit protection. The converter will fold-back the input power whenever a short circuit is applied to its output and automatically recover after the overload condition is removed.

CALIBRATION ADJUSTMENT

The F1 Series is equipped with an accessible potentiometer allowing for calibration after instillation.

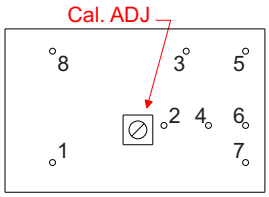

Bottom View

STARTUP TRANSIENT

Figure below shows a typical output voltage during turn-on, measured at no load current with no additional output filtering.

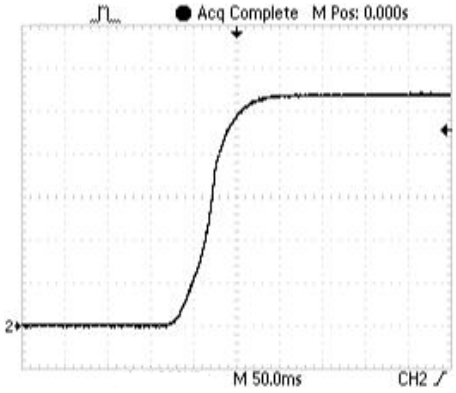

Figure below shows a typical output voltage during turn-on, measured at full rated load current with no additional output filtering.

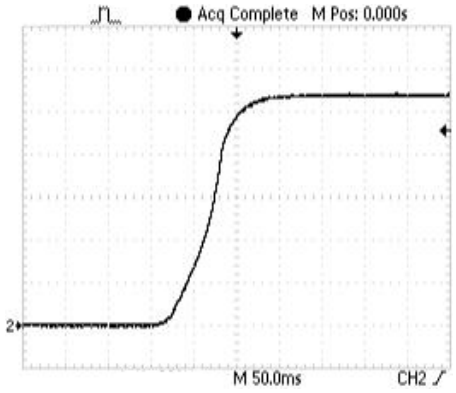

NOTE:

Input power should be applied at least 100msec prior to sending a voltage programming command.

European Master Stocking Distributor
Phone: +41 44 730 33 53
Email: sales@hvps-condatas.com · www.hvps-condatas.com
Rietbachstrasse 7 · 8952 Schlieren (ZH) · Switzerland

F1 SERIES 1 WATT PROGRAMABLE REGULATED HV DC/DC CONVERTERS

APPLICATION NOTES

OVER VOLTAGE PROGRAMMING

The F1 Series is equipped with an over voltage programming circuit designed to protect the output voltage from exceeding its maximum rating.

If the programming signal exceeds the reference voltage by more than 104% the converter will automatically shutdown and automatically recover when the programming signal returns to within normal operating range.

RIPPLE AND NOISE

Figure below shows a typical output voltage ripple waveform, measured at full rated load current with no additional output filtering. External low ESR capacitors may be added across output to further reduce ripple.

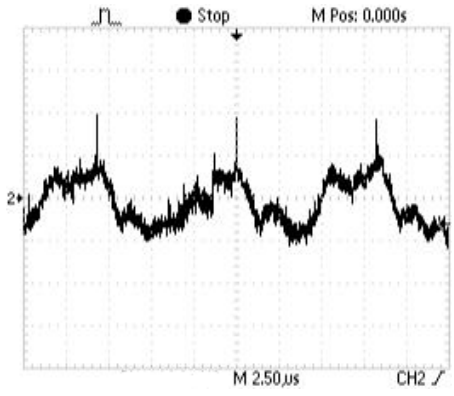

LOAD TRANSIENT

Figure below shows a typical output voltage response, measured during a transition from full rated load current to no load current with no additional output filtering.

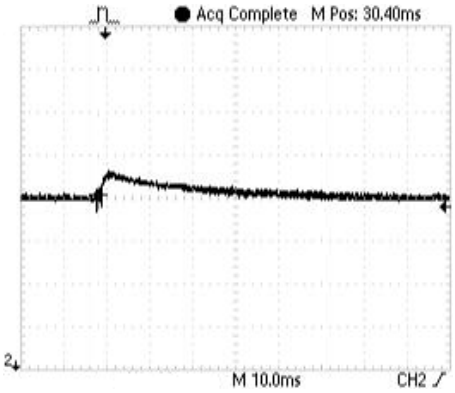

Figure below shows a typical output voltage response, measured during a transition from no load current to full rated load current with no additional output filtering.

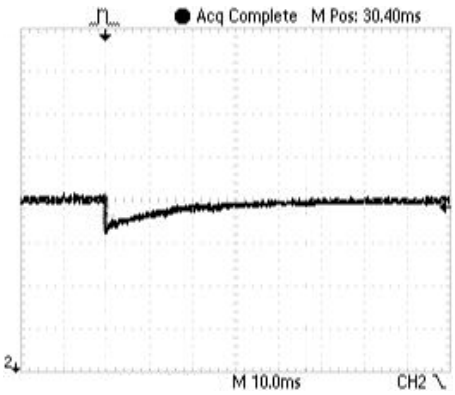

European Master Stocking Distributor
Phone: +41 44 730 33 53
Email: sales@hvps-condatas.com · www.hvps-condatas.com
Rietbachstrasse 7 · 8952 Schlieren (ZH) · Switzerland

F1 SERIES 1 WATT PROGRAMABLE REGULATED HV DC/DC CONVERTERS

PRECISION ON-BOARD REFERENCE

The F1 is equipped with an on-board precision reference circuit (Pin 4) capable of suppling up to 1mA of current. The precision, on board reference can be used in conjunction with an external potentiometer or voltage divider to program the high voltage output.

The Figure below shows how to connect an external Trim Pot.

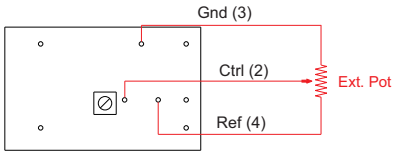

NOTE:

2.048Vdc Reference = 5k 20 Turn Trim Pot

5Vdc Reference = 10k 20 Turn Trim Pot

OUTPUT VOLTAGE MONITOR

The F1 is equipped with an output voltage monitor circuit (Pin 7). The voltage monitor is internally buffered to provide a low impedance (up to 1 mA) signal to external circuitry.

5V Input Models: 0 to 2.048Vdc = 0 to 100% VOUT

12V Input Models: 0 to 5Vdc = 0 to 100% VOUT

PROGRAMMING VOLTAGE

A control signal from 0 to 100% will program the power supply for 0 to 100% rated output voltage. The input impedance for this control pin (Pin 2) is typically 100KΩ.

OUTPUT VOLTAGE TRACKING

The output voltage tracks the Control pin (Pin 2) within 0.5% from 5% to 100% of output voltage.

Figure below show a typical plot of both the actual and calculated output voltage as a function of control voltage.

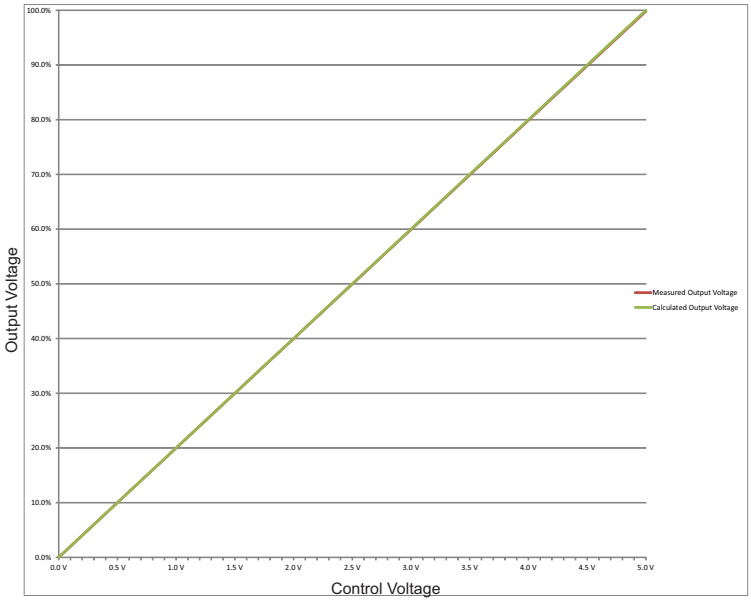

Operating Conditions:

Nominal Input Voltage = Fixed
Output Load = Resistive (fixed at full output current @ 100% output voltage)

European Master Stocking Distributor
Phone: +41 44 730 33 53
Email: sales@hvps-condatas.com · www.hvps-condatas.com
Rietbachstrasse 7 · 8952 Schlieren (ZH) · Switzerland

APPLICATION NOTES

EXTERNAL / REMOTE POTENTIOMETER

The output voltage of the F1 Series can be controlled with and external or remote potentiometer .

Figures below shows the typical connections needed.

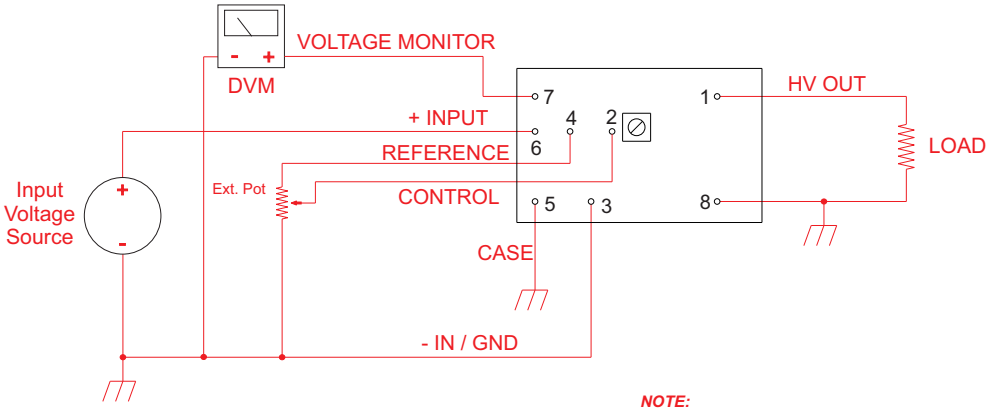

NOTE:

Output voltage monitor polarity is positive regardless of output voltage polarity.

EXTERNAL / REMOTE VOLTAGE SOURCE

The output voltage of the F1 Series can be controlled with an external or remote voltage source .

Figures below shows the typical connections needed.

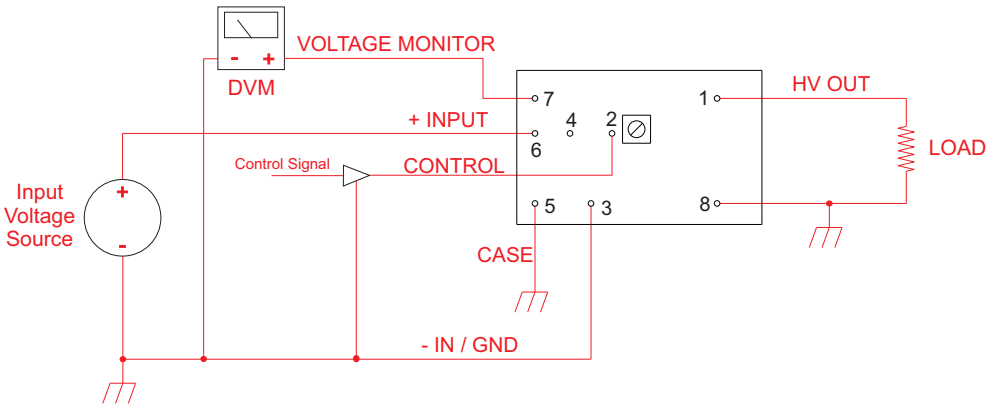

NOTE:

Output voltage monitor polarity is positive regardless of output voltage polarity.

European Master Stocking Distributor
Phone: +41 44 730 33 53
Email: sales@hvps-condatas.com · www.hvps-condatas.com
Rietbachstrasse 7 · 8952 Schlieren (ZH) · Switzerland

APPLICATION NOTES

CLEANING AGENTS

In order to avoid possible damage, any penetration of cleaning fluids must be prevented, since the power supplies are not hermetically sealed.

NUCLEAR AND MEDICAL APPLICATIONS

American Power Design products are not designed, intended for use in, or authorized for use as critical components in life support systems, equipment used in hazardous environments, or nuclear control systems without the express written consent of American Power Design, Inc.

TECHNICAL REVISIONS

The appearance of products, including safety agency certifications pictured on labels, may change depending on the date manufactured. Specifications are subject to change without notice.

SAFETY REQUIREMENTS

The converters are designed to meet North American and International safety regulatory requirements per UL 60950-1/CSA 22.2 No. 60950-1-07 Second Edition, IEC 60950-1: 2005, and EN 60950-1:2006. To comply with safety agencies requirements, an input line fuse must be used external to the converter. The table below provides the recommended fuse rating for use with this family of products.

Input Voltage Range	Fuse Rating
5Vdc	1A
12Vdc	0.5A

If one input fuse is used for a group of modules, the maximum fuse rating should not exceed 10A.

WARRANTY

All products manufactured by American Power Design, Inc. (APD) are warranted to be free of defects due to material or workmanship for a period of one year from date of shipment. At our option, APD will repair or replace any non-conforming product.
APD expressly disclaims any liability for consequential or incidental damages resulting from the use or misuse of its products by the purchaser or others.
This warranty is in lieu of all warranties expressed or implied, including the warranties of merchantability. No other warranties, obligations, or liabilities are expressed or implied.
All products being returned for repair require a return material authorization(RMA) assigned by APD prior to return shipment.

European Master Stocking Distributor
Phone: +41 44 730 33 53
Email: sales@hvps-condatas.com · www.hvps-condatas.com
Rietbachstrasse 7 · 8952 Schlieren (ZH) · Switzerland